SSL1523A

SMPS ICs for mains LED drivers

Rev. 1 — 25 April 2012 Product data sheet

1. General description

The SSL1523A is a Switched Mode Power Supply (SMPS) controller IC that operate directly from the rectified universal AC mains. It is implemented in the high-voltage Easy High Voltage Silicon-On-Insulator (EZ-HV SOI) process, combined with a low-voltage Bipolar Complementary Metal Oxide Semiconductor (BiCMOS) process. The device includes a high-voltage power switch and a start-up circuit that operates directly from the rectified mains voltage.

A dedicated circuit for valley switching is built in, which makes a very efficient slim-line electronic concept for solid state lighting applications possible.

The SSL1523A can operate in applications with a power range of up to 15 W.

In the most basic applications, the SSL1523A act as a voltage source. Here, no additional secondary electronics are required. A combined voltage and current source can be realized with minimum costs for external components. Implementation of the SSL1523A renders an efficient and low cost power supply system for mains LED drivers.

2. Features and benefits

- Designed for mains LED drivers up to 15 W
- Integrated power switch: 6.5 Ω; 650 V
- Operates from universal AC mains supplies (80 V to 276 V)
- Adjustable frequency for flexible design
- RC oscillator for load insensitive regulation loop constant
- Valley switching for minimum switch-on loss
- Low standby power (< 100 mW) with frequency reduction at low power outputs
- Adjustable overcurrent protection
- Undervoltage protection
- Temperature protection
- Simple application with both primary and secondary (opto) feedback
- Available in a DIP8 package

3. Applications

- Retro-fit LED lamps
- LED ballasts
- Contour lighting
- Channel letter lighting
- Commercial lighting, such as cabinet or freezer lights
- Other lighting applications

4. Quick reference data

Table 1. Quick reference data

Symbol	Parameter	Conditions	Min	Typ	Max	Unit
V_{DRAIN}	voltage on pin DRAIN	DMOS power transistor; T_j > 0 °C	–0.4	-	+650	V
R_{DSon}	drain-source on-state resistance	I_{source} = –0.50 A				
		T_j = 25 °C	-	6.5	7.5	Ω
		T_j = 100 °C	-	9.0	10.0	Ω
V_{CC}	supply voltage	continuous	–0.4	-	+40	V
f_{osc}	oscillator frequency		10	100	200	kHz
I_{DRAIN}	current on pin DRAIN	V_{DRAIN} > 60 V				
		no auxiliary supply	-	1.5	2	mA
		with auxiliary supply	-	30	125	µA

5. Ordering information

Table 2. Ordering information

Type number	Package		
	Name	Description	Version
SSL1523AP	DIP8	plastic dual in-line package; 8 leads (300 mil)	SOT97-1

All information provided in this document is subject to legal disclaimers.

© NXP B.V. 2012. All rights reserved.

6. Block diagram

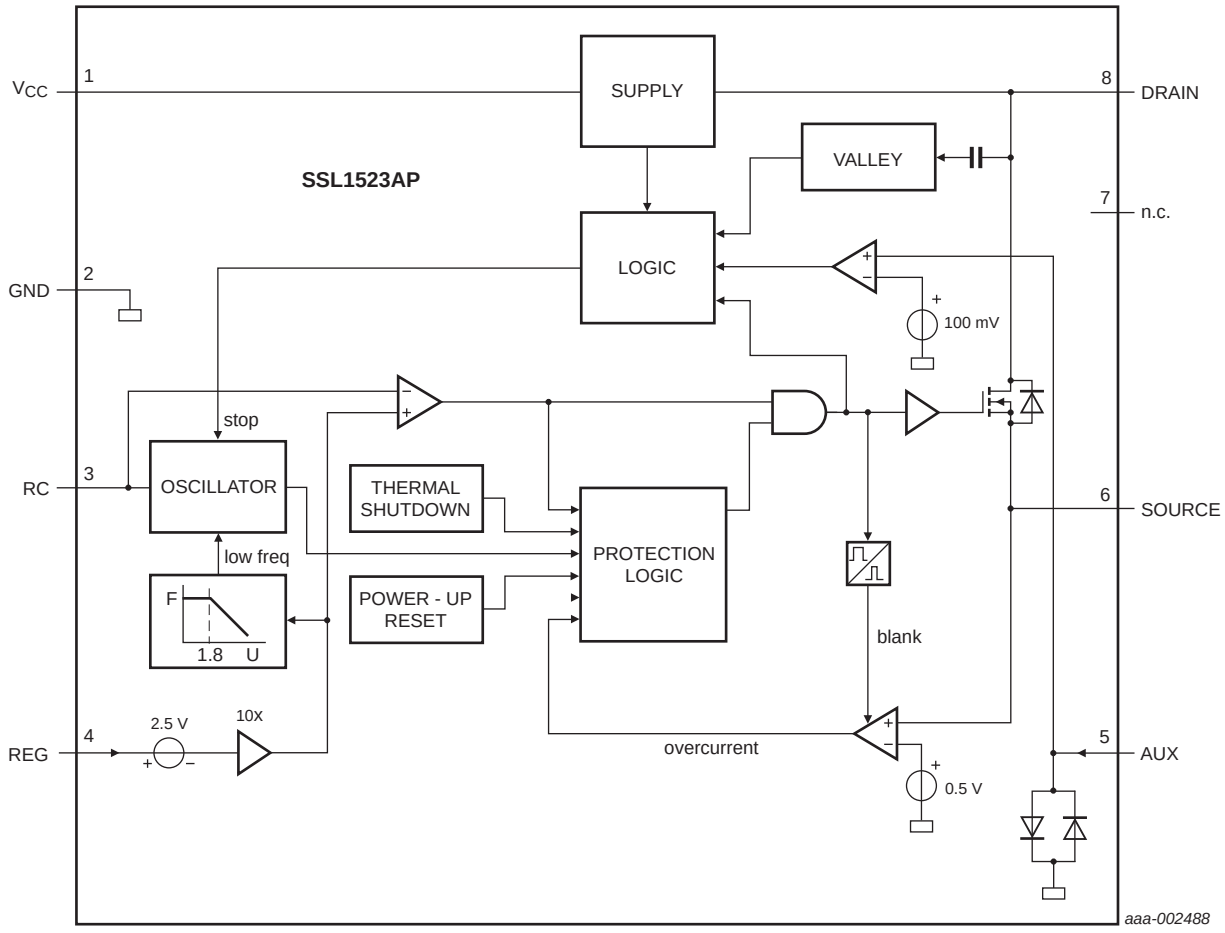

Fig 1. Block diagram

7. Pinning information

7.1 Pinning

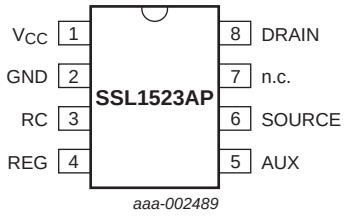

Fig 2. Pinning diagram (DIP8)

All information provided in this document is subject to legal disclaimers.

© NXP B.V. 2012. All rights reserved.

7.2 Pin description

Table 3. Pin description

Symbol	Pin (DIP8)	Description
V_{CC}	1	supply voltage
GND	2	ground
RC	3	frequency setting
REG	4	regulation input
AUX	5	input for voltage from auxiliary winding for timing (demagnetization)
SOURCE	6	source of internal MOS switch
n.c.	7	not connected
DRAIN	8	drain of internal MOS switch; input for start-up current and valley sensing

8. Functional description

The SSL1523A is the heart of a compact flyback converter, with the IC placed at the primary side. The auxiliary winding of the transformer can be used for indirect feedback to control the isolated output. This additional winding also powers the IC. A more accurate control of the output voltage and/or current can be implemented with an additional secondary sensing circuit and optocoupler feedback.

The SSL1523A uses voltage mode control. The switching frequency is determined by the maximum transformer demagnetizing time and the frequency of the oscillator. In the first case, the converter operates in the Self Oscillating Power Supply (SOPS) mode. In the latter case, it operates at a constant frequency, which can be adjusted with external components R_{RC} and C_{RC}. Furthermore, a primary stroke is started only in a valley of the secondary ringing. This can use constant power or constant current mode to drive LEDs. The valley switching principle minimizes capacitive switch-on losses.

8.1 Start-up and undervoltage lockout

Initially, the IC is self-supplying from the rectified mains voltage. The IC starts switching as soon as the voltage on pin V_{CC} passes the $V_{CC(startup)}$ level. The supply is taken over by the auxiliary winding of the transformer as soon as V_{CC} is high enough and the supply from the line is stopped for high efficiency operation.

If the auxiliary supply is not sufficient, the high-voltage supply also supplies the IC. As soon as the voltage on pin V_{CC} drops below the $V_{CC(stop)}$ level, the IC stops switching and restarts from the rectified mains voltage.

8.2 Oscillator

The frequency of the oscillator is set by the external resistor and capacitor on pin RC. The external capacitor is charged rapidly to the $V_{RC(max)}$ level and, starting from a new primary stroke, it discharges to the $V_{RC(min)}$ level. Because the discharge is exponential, the relative sensitivity of the duty factor to the regulation voltage at low duty factor is almost equal to the sensitivity at high duty factors. This results in a more constant gain over the duty factor range compared to systems with a linear sawtooth oscillator. Stable operation

All information provided in this document is subject to legal disclaimers.

© NXP B.V. 2012. All rights reserved.

at low duty factors is easily realized. For high efficiency, the frequency is reduced as soon as the duty factor drops below its low power threshold. This is accomplished by increasing the oscillator charge time.

To ensure that the capacitor can be charged within the charge time, the value of the oscillator capacitor should be limited to approximately 1 nF.

8.3 Duty factor control

The duty factor is controlled by the internal regulation voltage and the oscillator signal on pin RC. The internal regulation voltage is equal to the external regulation voltage (minus 2.5 V) multiplied by the gain of the error amplifier (typically 20 dB).

8.4 Valley switching

A new cycle is started when the primary switch is switched on (see Figure 3). After a certain time (determined by the oscillator voltage RC and the internal regulation level), the switch is turned off and the secondary stroke starts. The internal regulation level is determined by the voltage on pin REG.

After the secondary stroke, the drain voltage shows an oscillation with a frequency approximately equal to the value given by Equation 1:

$$\frac{1}{2 \times \pi \times \sqrt{(L_p \times C_p)}} \quad (1)$$

where:

L_p = primary self-inductance

C_p = parasitic capacitance on drain node

As soon as the oscillator voltage becomes high again and after the secondary stroke has ended, the circuit waits for a low drain voltage before starting a new primary stroke.

Figure 3 shows the drain voltage together with the valley signal, the signal indicating the secondary stroke and the RC voltage.

The primary stroke starts some time before the actual valley at low ringing frequencies, and some time after the actual valley at high ringing frequencies.

All information provided in this document is subject to legal disclaimers.

© NXP B.V. 2012. All rights reserved.

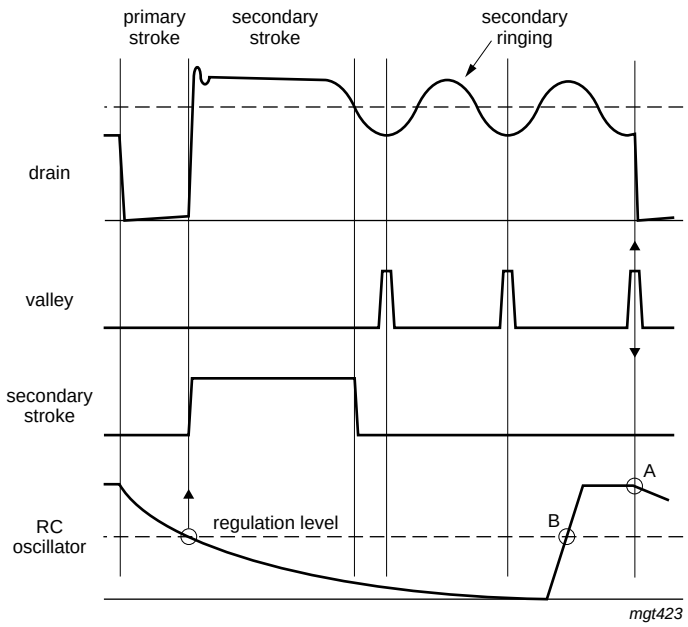

A: Start of new cycle with valley switching.

B: Start of new cycle in a classical system.

Fig 3. Signals for valley switching

Figure 4 shows a typical curve for a reflected output voltage $N \times V_o$ of 80 V. This voltage is the output voltage V_o (see Figure 5) transferred to the primary side of the transformer with the factor N (determined by the turns ratio of the transformer). Figure 4 shows that the system switches at the minimum drain voltage for ringing frequencies of 480 kHz, thus reducing the switch-on losses to a minimum. At 200 kHz, the next primary stroke is started at 33 ° before the valley. The switch-on losses are still reduced significantly.

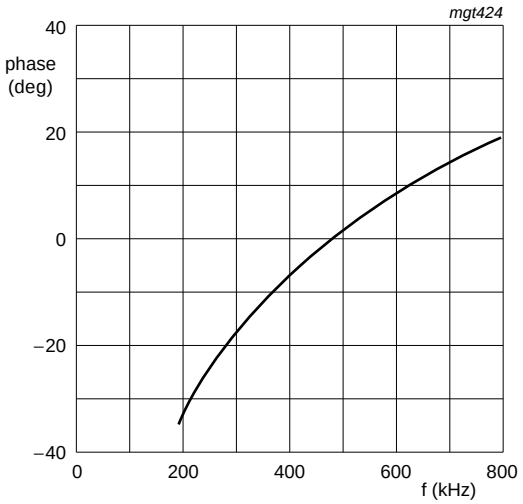

Fig 4. Typical phase of drain ringing at switch-on (at $N \times V_o$ = 80 V)

All information provided in this document is subject to legal disclaimers.

© NXP B.V. 2012. All rights reserved.

8.5 Demagnetization

The system operates in discontinuous conduction mode all the time. As long as the secondary stroke has not ended, the oscillator will not start a new primary stroke. During the first $t_{sup(xfmr_ring)}$ seconds, demagnetization recognition is suppressed. This suppression may be necessary in applications where the transformer has a large leakage inductance and at low output voltages.

8.6 Minimum and maximum duty factor

The minimum duty factor of the switched mode power supply is 0 %. The maximum duty factor is set to 75 % (typical value at 100 kHz oscillation frequency).

8.7 OverCurrent Protection (OCP)

The cycle-by-cycle peak drain current limit circuit uses the external source resistor R_I to measure the current. The circuit is activated after the leading edge blanking time t_{leb}. The protection circuit limits the source voltage to $V_{SOURCE(max)}$ and thus limits the primary peak current.

8.8 OverTemperature Protection (OTP)

An accurate temperature protection is provided in the device. When the junction temperature exceeds the thermal shutdown temperature, the IC stops switching. During thermal protection, the IC current is lowered to the start-up current. The IC continues normal operation as soon as the overtemperature situation has disappeared.

8.9 OverVoltage Protection (OVP)

Overvoltage protection can be achieved in the application by pulling pin REG above its normal operation level. The current primary stroke is terminated immediately. No new primary stroke is started until the voltage on pin REG drops to its normal operation level. Pin REG has an internal clamp. The current feed into this pin must be limited.

8.10 Characteristics of complete LED power supply

8.10.1 Input

The input voltage range comprises the universal AC mains from 80 V to 276 V.

8.10.2 Accuracy

The accuracy of the complete converter, functioning as a voltage source with primary sensing, is approximately 8 % (mainly dependent on the transformer coupling). The accuracy with secondary sensing is defined by the accuracy of the external components. For safety requirements in case of optocoupler feedback loss, the primary sensing remains active when an overvoltage circuit is connected.

8.10.3 Efficiency

An efficiency over 80 % at maximum output power can be achieved for a complete converter designed for universal mains.

All information provided in this document is subject to legal disclaimers.

© NXP B.V. 2012. All rights reserved.

8.10.4 Ripple

A minimum ripple is obtained in a system designed for a maximum duty factor of 50 % under normal operating conditions and a minimized dead time. The magnitude of the ripple in the output voltage is determined by the frequency and duty factor of the converter, the output current level, and the value and Equivalent Series Resistance (ESR) of the output capacitor.

8.10.5 Output

The SSL1523A can operate over a wide range of output power levels up to 15 W.

All information provided in this document is subject to legal disclaimers.

© NXP B.V. 2012. All rights reserved.

9. Limiting values

Table 4. Limiting values

In accordance with the Absolute Maximum Rating System (IEC 60134). All voltages are measured with respect to ground; positive currents flow into the device; pins V_{CC} and RC are not allowed to be current driven and pins REG and AUX are not allowed to be voltage driven.

Symbol	Parameter	Conditions		Min	Max	Unit
Voltage						
V_{CC}	supply voltage	continuous		–0.4	+40	V
V_{RC}	voltage on pin RC	oscillator input voltage		–0.4	+3	V
V_{SOURCE}	voltage on pin SOURCE	DMOS power transistor		–0.4	+5	V
V_{DRAIN}	voltage on pin DRAIN	DMOS power transistor; T_j > 0 °C		–0.4	+650	V
Current						
I_{REG}	current on pin REG			-	6	mA
I_{AUX}	current on pin AUX			–10	+5	mA
I_{source}	source current			–2	+2	A
I_{DRAIN}	current on pin DRAIN			–2	+2	A
General						
P_{tot}	total power dissipation	T_{amb} < 45 °C		-	1.0	W
T_{stg}	storage temperature			–55	+150	°C
T_j	junction temperature			–40	+145	°C
V_{ESD}	electrostatic discharge voltage	human body model	[1]	-	±2500	V
		machine model	[2]	-	±200	V

[1] Human body model: equivalent to discharging a 100 pF capacitor through a 1.5 kΩ series resistor. All pins are 2500 V maximum, except pin DRAIN, which is 1000 V maximum.

[2] Machine model: equivalent to discharging a 200 pF capacitor through a 0.75 µH coil and a 10 Ω series resistor.

10. Thermal characteristics

Table 5. Thermal characteristics

Symbol	Parameter	Conditions		Typ	Unit
$R_{th(j-a)}$	thermal resistance from junction to ambient	in free air	[1]	100	K/W

[1] Thermal resistance $R_{th(j-a)}$ can be lower when the GND pins are connected to sufficient copper area on the printed-circuit board. See the SSL152x application notes for details.

All information provided in this document is subject to legal disclaimers.

© NXP B.V. 2012. All rights reserved.

11. Characteristics

Table 6. Characteristics

Measurement data valid at T_{amb} = 25 °C; no overtemperature; all voltages are measured with respect to ground; currents are positive when flowing into the IC; unless otherwise specified.

Symbol	Parameter	Conditions	Min	Typ	Max	Unit
Supply						
$I_{CC(oper)}$	operating supply current	normal operation	-	1.3	1.9	mA
$I_{CC(startup)}$	start-up supply current	start-up	-	180	400	µA
I_{CC}	supply current	V_{DRAIN} > 60 V	–6	–4	–3	mA
$V_{CC(startup)}$	start-up supply voltage		9	9.5	10	V
$V_{CC(stop)}$	stop supply voltage	undervoltage lockout	7.0	7.5	8.0	V
I_{DRAIN}	current on pin DRAIN	V_{DRAIN} > 60 V				
		no auxiliary supply	-	1.5	2	mA
		with auxiliary supply	-	30	125	µA
Pulse-width modulator						
δ_{min}	minimum duty factor		-	0	-	%
δ_{max}	maximum duty cycle	f = 100 kHz	-	75	-	%
SOPS						
$V_{det(demag)}$	demagnetization detection voltage		50	100	150	mV
$t_{sup(xfmr_ring)}$	transformer ringing suppression time		1.0	1.5	2.0	µs
RC oscillator						
$V_{RC(min)}$	minimum voltage on pin RC		60	75	90	mV
$V_{RC(max)}$	maximum voltage on pin RC		2.4	2.5	2.6	V
t_{ch}	charge time		-	1	-	µs
f_{osc}	oscillator frequency		10	100	200	kHz
Duty factor regulator: pin REG						
V_{REG}	voltage on pin REG		2.4	2.5	2.6	V
G_v	voltage gain		-	20	-	dB
$V_{clamp(REG)}$	clamp voltage on pin REG	I_{REG} = 6 mA	-	-	7.5	V
Valley switching						
$(\Delta V/\Delta t)_{vrec}$	valley recognition voltage change with time		–102	-	+102	V/µs
f_{ring}	ringing frequency	$N \times V_o$ = 100 V	200	550	800	kHz
$t_{d(vrec-swon)}$	valley recognition to switch-on delay time		-	150	-	ns
Current protection						
$V_{SOURCE(max)}$	maximum voltage on pin SOURCE	$\Delta V/\Delta t$ = 0.1 V/µs	0.47	0.50	0.53	V
t_d	delay time	$\Delta V/\Delta t$ = 0.5 V/µs	-	160	185	ns
t_{leb}	leading edge blanking time		250	350	450	ns
FET output stage						
$I_{L(DRAIN)}$	leakage current on pin DRAIN	V_{DRAIN} = 650 V	-	-	125	µA
$V_{BR(DRAIN)}$	breakdown voltage on pin DRAIN	T_j > 0 °C	650	-	-	V

All information provided in this document is subject to legal disclaimers.

© NXP B.V. 2012. All rights reserved.

Table 6. Characteristics *...continued*

Measurement data valid at T_{amb} = 25 °C; no overtemperature; all voltages are measured with respect to ground; currents are positive when flowing into the IC; unless otherwise specified.

Symbol	Parameter	Conditions	Min	Typ	Max	Unit
R_{DSon}	drain-source on-state resistance	I_{source} = –0.50 A				
		T_j = 25 °C	-	6.5	7.5	Ω
		T_j = 100 °C	-	9.0	10.0	Ω
$t_{f(DRAIN)}$	fall time on pin DRAIN	V_i = 300 V; no external capacitor at drain	-	75	-	ns
Temperature protection						
T_{prot}	protection temperature		150	160	170	°C
$T_{prot(hys)}$	hysteresis of protection temperature		-	2	-	°C

All information provided in this document is subject to legal disclaimers.

© NXP B.V. 2012. All rights reserved.

12. Application information

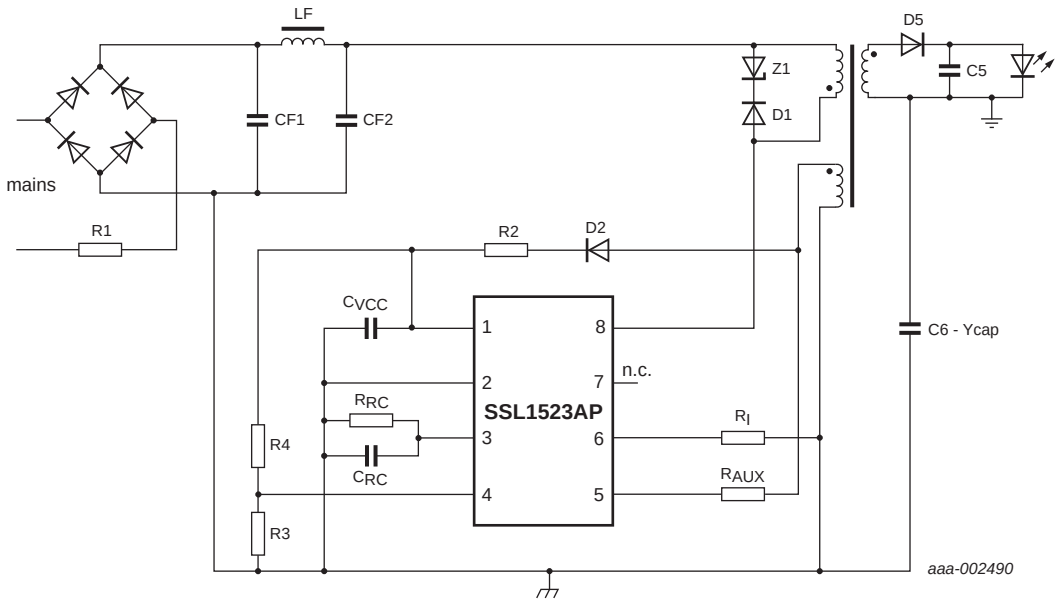

Fig 5. Typical configuration of SSL1523A - primary sensing

All information provided in this document is subject to legal disclaimers.

© NXP B.V. 2012. All rights reserved.

13. Package outline

DIP8: plastic dual in-line package; 8 leads (300 mil) **SOT97-1**

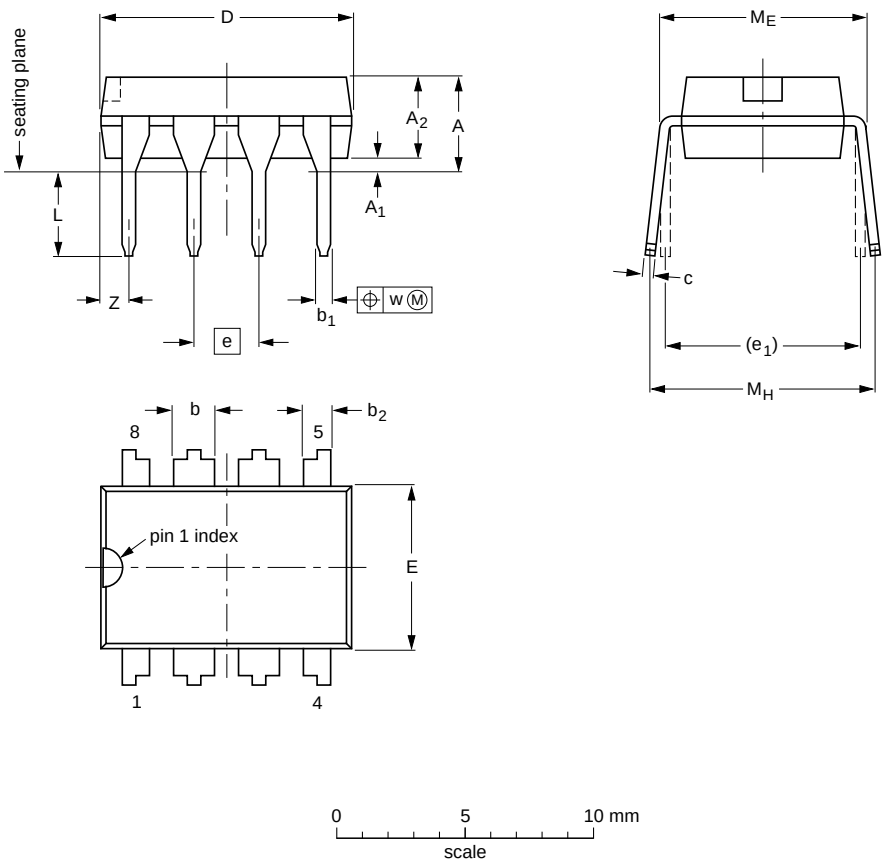

DIMENSIONS (inch dimensions are derived from the original mm dimensions)

UNIT	A max.	A_1 min.	A_2 max.	b	b_1	b_2	c	D (1)	E (1)	e	e_1	L	M_E	M_H	w	Z (1) max.
mm	4.2	0.51	3.2	1.73 1.14	0.53 0.38	1.07 0.89	0.36 0.23	9.8 9.2	6.48 6.20	2.54	7.62	3.60 3.05	8.25 7.80	10.0 8.3	0.254	1.15
inches	0.17	0.02	0.13	0.068 0.045	0.021 0.015	0.042 0.035	0.014 0.009	0.39 0.36	0.26 0.24	0.1	0.3	0.14 0.12	0.32 0.31	0.39 0.33	0.01	0.045

Note

1. Plastic or metal protrusions of 0.25 mm (0.01 inch) maximum per side are not included.

OUTLINE VERSION	REFERENCES				EUROPEAN PROJECTION	ISSUE DATE
	IEC	JEDEC	JEITA			
SOT97-1	050G01	MO-001	SC-504-8			~~99-12-27~~ 03-02-13

Fig 6. Package outline SOT97-1 (DIP8)

All information provided in this document is subject to legal disclaimers.

© NXP B.V. 2012. All rights reserved.

14. Abbreviations

Table 7. Abbreviations

Acronym	Description
BiCMOS	Bipolar Complementary Metal Oxide Semiconductor
DMOS	Diffusion Metal Oxide Semiconductor
ESR	Equivalent Series Resistance
EZ-HV SOI	Easy High Voltage Silicon-On-Insulator
FET	Field-Effect Transistor
SMPS	Switched Mode Power Supply
SOPS	Self-Oscillating Power Supply

15. Revision history

Table 8. Revision history

Document ID	Release date	Data sheet status	Change notice	Supersedes
SSL1523A v.1	20120425	Product data sheet	-	-

All information provided in this document is subject to legal disclaimers.

© NXP B.V. 2012. All rights reserved.

16. Legal information

16.1 Data sheet status

Document status[1][2]	Product status[3]	Definition
Objective [short] data sheet	Development	This document contains data from the objective specification for product development.
Preliminary [short] data sheet	Qualification	This document contains data from the preliminary specification.
Product [short] data sheet	Production	This document contains the product specification.

[1] Please consult the most recently issued document before initiating or completing a design.

[2] The term 'short data sheet' is explained in section "Definitions".

[3] The product status of device(s) described in this document may have changed since this document was published and may differ in case of multiple devices. The latest product status information is available on the Internet at URL http://www.nxp.com.

16.2 Definitions

Draft — The document is a draft version only. The content is still under internal review and subject to formal approval, which may result in modifications or additions. NXP Semiconductors does not give any representations or warranties as to the accuracy or completeness of information included herein and shall have no liability for the consequences of use of such information.

Short data sheet — A short data sheet is an extract from a full data sheet with the same product type number(s) and title. A short data sheet is intended for quick reference only and should not be relied upon to contain detailed and full information. For detailed and full information see the relevant full data sheet, which is available on request via the local NXP Semiconductors sales office. In case of any inconsistency or conflict with the short data sheet, the full data sheet shall prevail.

Product specification — The information and data provided in a Product data sheet shall define the specification of the product as agreed between NXP Semiconductors and its customer, unless NXP Semiconductors and customer have explicitly agreed otherwise in writing. In no event however, shall an agreement be valid in which the NXP Semiconductors product is deemed to offer functions and qualities beyond those described in the Product data sheet.

16.3 Disclaimers

Limited warranty and liability — Information in this document is believed to be accurate and reliable. However, NXP Semiconductors does not give any representations or warranties, expressed or implied, as to the accuracy or completeness of such information and shall have no liability for the consequences of use of such information. NXP Semiconductors takes no responsibility for the content in this document if provided by an information source outside of NXP Semiconductors.

In no event shall NXP Semiconductors be liable for any indirect, incidental, punitive, special or consequential damages (including - without limitation - lost profits, lost savings, business interruption, costs related to the removal or replacement of any products or rework charges) whether or not such damages are based on tort (including negligence), warranty, breach of contract or any other legal theory.

Notwithstanding any damages that customer might incur for any reason whatsoever, NXP Semiconductors' aggregate and cumulative liability towards customer for the products described herein shall be limited in accordance with the *Terms and conditions of commercial sale* of NXP Semiconductors.

Right to make changes — NXP Semiconductors reserves the right to make changes to information published in this document, including without limitation specifications and product descriptions, at any time and without notice. This document supersedes and replaces all information supplied prior to the publication hereof.

Suitability for use — NXP Semiconductors products are not designed, authorized or warranted to be suitable for use in life support, life-critical or safety-critical systems or equipment, nor in applications where failure or malfunction of an NXP Semiconductors product can reasonably be expected to result in personal injury, death or severe property or environmental damage. NXP Semiconductors and its suppliers accept no liability for inclusion and/or use of NXP Semiconductors products in such equipment or applications and therefore such inclusion and/or use is at the customer's own risk.

Applications — Applications that are described herein for any of these products are for illustrative purposes only. NXP Semiconductors makes no representation or warranty that such applications will be suitable for the specified use without further testing or modification.

Customers are responsible for the design and operation of their applications and products using NXP Semiconductors products, and NXP Semiconductors accepts no liability for any assistance with applications or customer product design. It is customer's sole responsibility to determine whether the NXP Semiconductors product is suitable and fit for the customer's applications and products planned, as well as for the planned application and use of customer's third party customer(s). Customers should provide appropriate design and operating safeguards to minimize the risks associated with their applications and products.

NXP Semiconductors does not accept any liability related to any default, damage, costs or problem which is based on any weakness or default in the customer's applications or products, or the application or use by customer's third party customer(s). Customer is responsible for doing all necessary testing for the customer's applications and products using NXP Semiconductors products in order to avoid a default of the applications and the products or of the application or use by customer's third party customer(s). NXP does not accept any liability in this respect.

Limiting values — Stress above one or more limiting values (as defined in the Absolute Maximum Ratings System of IEC 60134) will cause permanent damage to the device. Limiting values are stress ratings only and (proper) operation of the device at these or any other conditions above those given in the Recommended operating conditions section (if present) or the Characteristics sections of this document is not warranted. Constant or repeated exposure to limiting values will permanently and irreversibly affect the quality and reliability of the device.

Terms and conditions of commercial sale — NXP Semiconductors products are sold subject to the general terms and conditions of commercial sale, as published at http://www.nxp.com/profile/terms, unless otherwise agreed in a valid written individual agreement. In case an individual agreement is concluded only the terms and conditions of the respective agreement shall apply. NXP Semiconductors hereby expressly objects to applying the customer's general terms and conditions with regard to the purchase of NXP Semiconductors products by customer.

No offer to sell or license — Nothing in this document may be interpreted or construed as an offer to sell products that is open for acceptance or the grant, conveyance or implication of any license under any copyrights, patents or other industrial or intellectual property rights.

All information provided in this document is subject to legal disclaimers.

© NXP B.V. 2012. All rights reserved.

Quick reference data — The Quick reference data is an extract of the product data given in the Limiting values and Characteristics sections of this document, and as such is not complete, exhaustive or legally binding.

Export control — This document as well as the item(s) described herein may be subject to export control regulations. Export might require a prior authorization from competent authorities.

Non-automotive qualified products — Unless this data sheet expressly states that this specific NXP Semiconductors product is automotive qualified, the product is not suitable for automotive use. It is neither qualified nor tested in accordance with automotive testing or application requirements. NXP Semiconductors accepts no liability for inclusion and/or use of non-automotive qualified products in automotive equipment or applications.

In the event that customer uses the product for design-in and use in automotive applications to automotive specifications and standards, customer (a) shall use the product without NXP Semiconductors' warranty of the product for such automotive applications, use and specifications, and (b) whenever customer uses the product for automotive applications beyond NXP Semiconductors' specifications such use shall be solely at customer's own risk, and (c) customer fully indemnifies NXP Semiconductors for any liability, damages or failed product claims resulting from customer design and use of the product for automotive applications beyond NXP Semiconductors' standard warranty and NXP Semiconductors' product specifications.

16.4 Trademarks

Notice: All referenced brands, product names, service names and trademarks are the property of their respective owners.

17. Contact information

For more information, please visit: **http://www.nxp.com**

For sales office addresses, please send an email to: **salesaddresses@nxp.com**

All information provided in this document is subject to legal disclaimers.

© NXP B.V. 2012. All rights reserved.

18. Contents

1 General description 1
2 Features and benefits 1
3 Applications 2
4 Quick reference data 2
5 Ordering information 2
6 Block diagram 3
7 Pinning information 3
7.1 Pinning 3
7.2 Pin description 4
8 Functional description 4
8.1 Start-up and undervoltage lockout 4
8.2 Oscillator 4
8.3 Duty factor control 5
8.4 Valley switching 5
8.5 Demagnetization 7
8.6 Minimum and maximum duty factor 7
8.7 OverCurrent Protection (OCP) 7
8.8 OverTemperature Protection (OTP) 7
8.9 OverVoltage Protection (OVP) 7
8.10 Characteristics of complete LED power supply 7
8.10.1 Input 7
8.10.2 Accuracy 7
8.10.3 Efficiency 7
8.10.4 Ripple 8
8.10.5 Output 8
9 Limiting values 9
10 Thermal characteristics 9
11 Characteristics 10
12 Application information 12
13 Package outline 13
14 Abbreviations 14
15 Revision history 14
16 Legal information 15
16.1 Data sheet status 15
16.2 Definitions 15
16.3 Disclaimers 15
16.4 Trademarks 16
17 Contact information 16
18 Contents 17

Please be aware that important notices concerning this document and the product(s) described herein, have been included in section ‘Legal information’.

© NXP B.V. 2012. All rights reserved.

For more information, please visit: http://www.nxp.com
For sales office addresses, please send an email to: salesaddresses@nxp.com

Date of release: 25 April 2012
Document identifier: SSL1523A